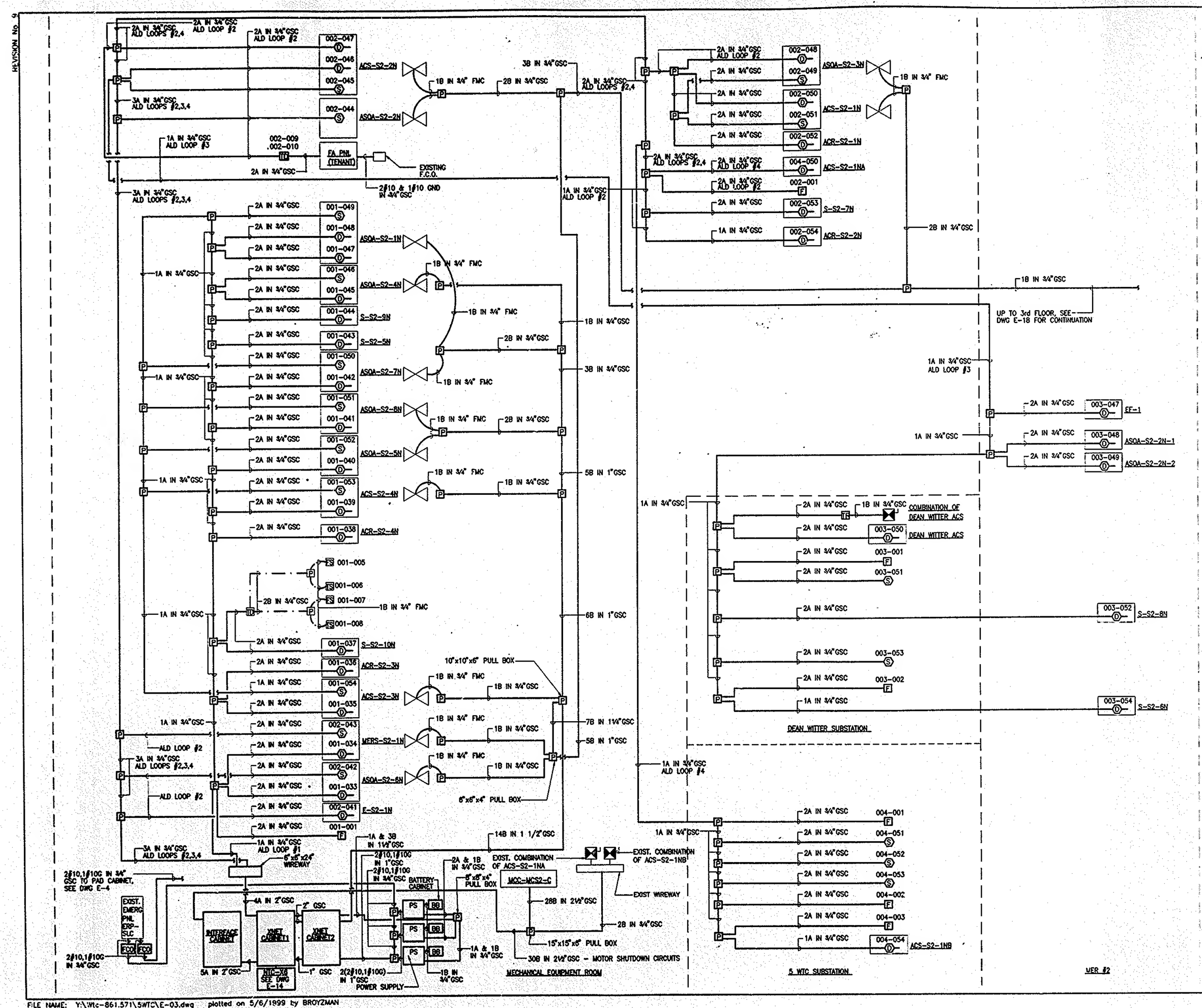

FILE NAME: Y:\Wtc-861.571\5WTC\E-03.dwg plotted on 5/6/1999 by BROYZMAN